StoneAge® WHR Switcher (WHR 040-RXX-SWT)

Description:

The Switcher is designed to allow an operator to ñswitchò between a pulling/flushing mode and a cleaning mode while using the same head. This is made possible by an internal mechanism called a Poppet. When flow is cycled on and off, the Poppet redirects all flow to either the pulling/flushing (back and front) jets or the cleaning (side) jets. One Warthog Switcher Head can perform a cleaning job that would normally require two or more different heads with different jet configurations. Utilizing the Switcher head will increase both time and water consumption savings. The design is more efficient because all of the flow is directed to exactly where it is most useful for either pulling/flushing or cleaning.

Operation:

Install the WHR Switcher Nozzle onto the hose end. Position hose and nozzle into the pipe to be cleaned. We recommend running the nozzle into the pipe about 3-5 feet. Verify switcherõs position of by bringing the nozzle up to operating pressure.
Note: 1) While pressurizing the hose and nozzle expect a pressure jump when the switcher engages, which should be below the operating pressure. 2) In the pulling/flushing mode there will be more tension on the hose versus the cleaning mode. Also listen to the sound and watch the air/water flowing out of the pipe. Faster air/water flowing from the pipe indicates the switcher is in the pulling/flushing mode. Slower air/water flowing from the pipe indicates the switcher is in the cleaning mode. To switch modes, depressurize the hose and nozzle until the pressure gauge reads zero. This may take several seconds. Then bring the hose and nozzle back to operating pressure. Repeat these steps to switch between modes as necessary.

Suggested Use:

- The pulling/flushing (back and front jets) mode transports the tool down the line quickly to a problem area in the pipe. Then the tool can be switched between the cleaning (side jets) mode to efficiently clean buildups and the pulling/flushing mode to flush debris. This process can be repeated until the obstruction is removed.
- Pulling jets can be used to pull the tool up steep sections of pipe. Switching the tool to cleaning mode and pulling it back down the pipe will provide a thorough clean.
- The Switcher can also be used in conjunction with a camera truck to ensure proper cleaning. Tool can be switched to the cleaning mode in problem areas of the pipe if detected by the camera operator. Once the obstruction is cleared, the tool can be switched back to the pulling/flushing mode to flush the debris back down the line. Communication between the camera operator and the tool operator can greatly increase efficiency providing better cleaning in less time.

Trouble Shooting:

Tool Is Not Switching:

- If the Switcher appears to be "stuck" in either the pulling/flushing or cleaning mode, first cycle the pump up and down in pressure several times.
- If cycling the tool doesn't fix the problem, the Switcher will need to be removed from the WHR tool and disassembled (refer to the disassembly/assembly page). The Switcher is designed to handle debris up to .030 inches in diameter, but larger particles may lock up the mechanism. Thoroughly clean all the components once disassembled. Examine components for exessive wear or any other visible problems. Once cleaned and examined, the Switcher can be reassembled following the proceedure on the second page. If proper switching is not achieved with this procedure, the Switcher will need to be returned to StoneAge for evaluation.

Parts List:

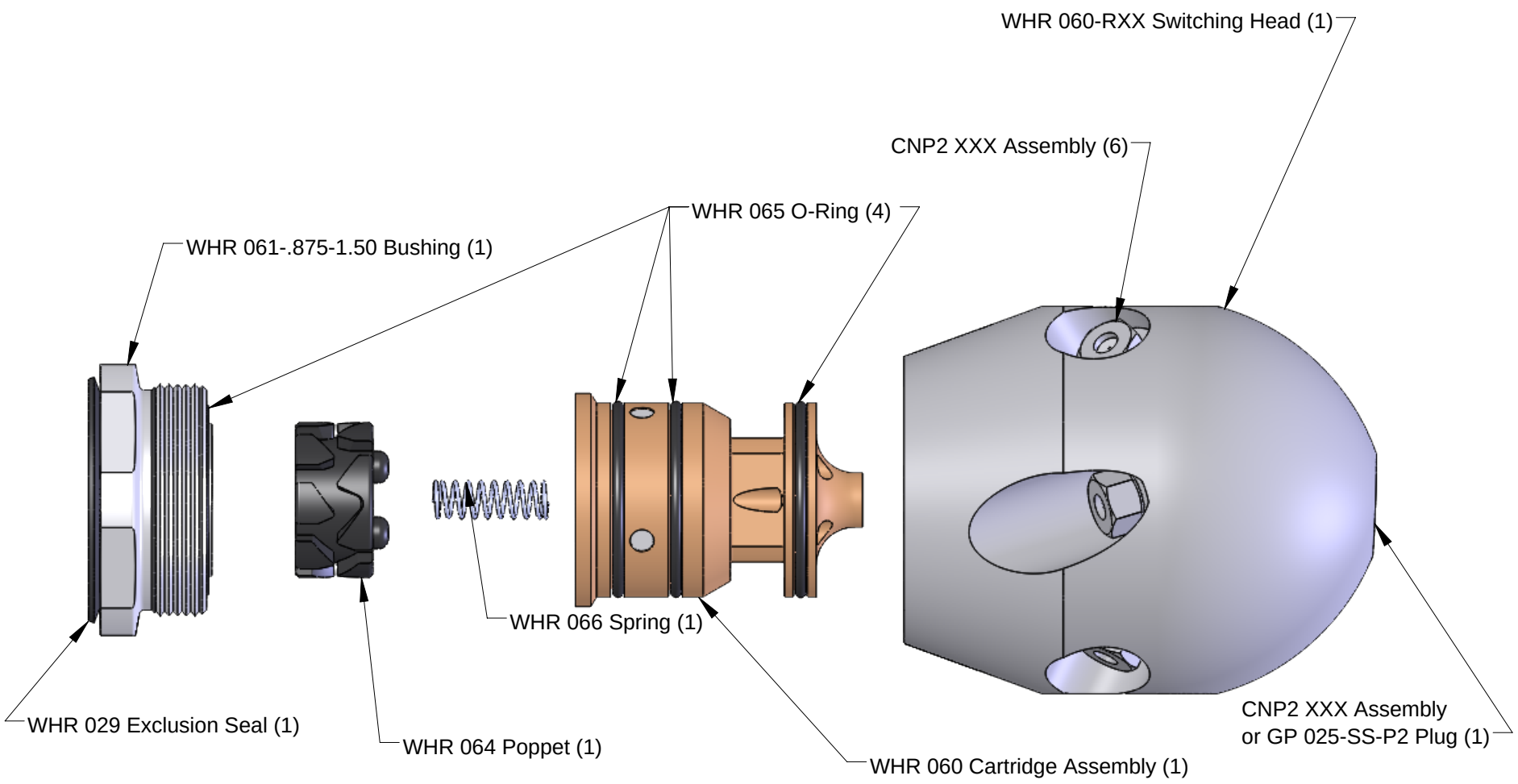

For terms and conditions of sale see: http://www.stoneagetools.com/terms
For limited warranty see: http://www.stoneagetools.com/warranty
For applicable patents see: http://www.sapatents.com

StoneAge® WHR Switcher (WHR 040-RXX-SWT)

DISASSEMBLY:

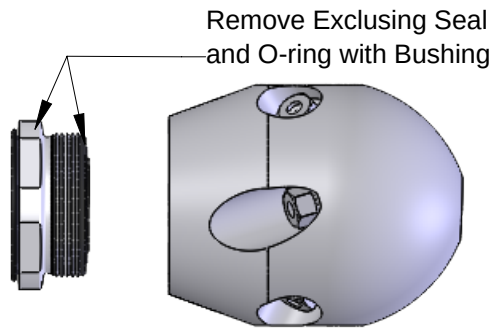

Step 1: Once the Switcher is removed from the tool, remove threaded bushing (WHR 061-.875-1.50) from the head (WHR 060-RXX).

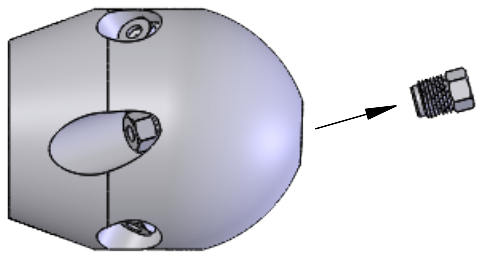

Step 2: Next, remove the front nozzle or plug (depending on jetted configuration).

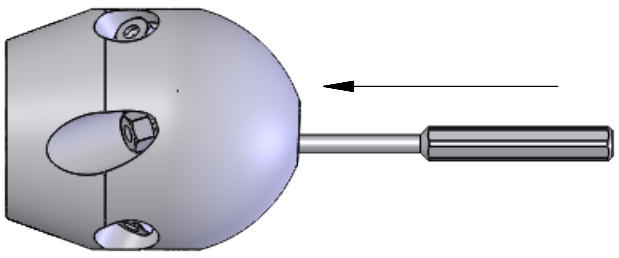

Step 3: Once the nozzle or plug is removed, insert an appropriate sized punch through the nozzle port to contact the nose of the cartridge assembly inside the head. Using an arbor press or light hammer taps, press the cartridge assembly out of the head.

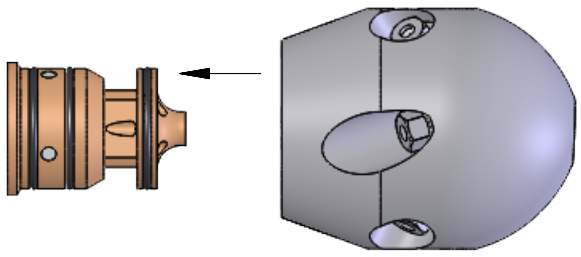

Step 4: Fully remove the cartridge assembly from the head.

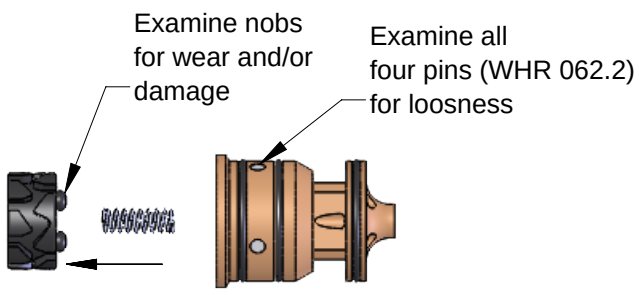

Step 5: Cycle poppet (WHR 064) inside the cartridge (WHR 062) until it can be removed. Inspect the poppet, cartridge, and spring (WHR 066) for signs of wear. Replace if necessary. If parts can be reused, wash thoroughly with warm water before reinstallation.

ASSEMBLY:

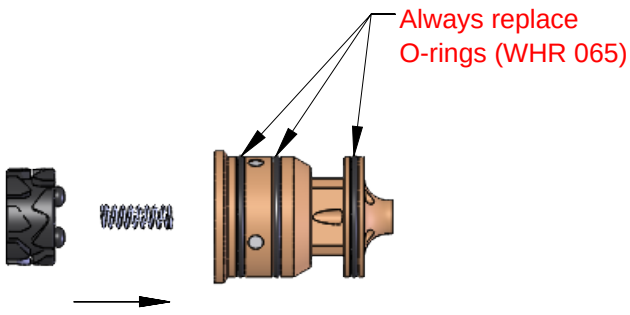

Step 1: Reinstall spring (WHR 066) into the cartridge (WHR 062). Install the poppet (WHR 064) into cartridge and cycle once to hold it in place.

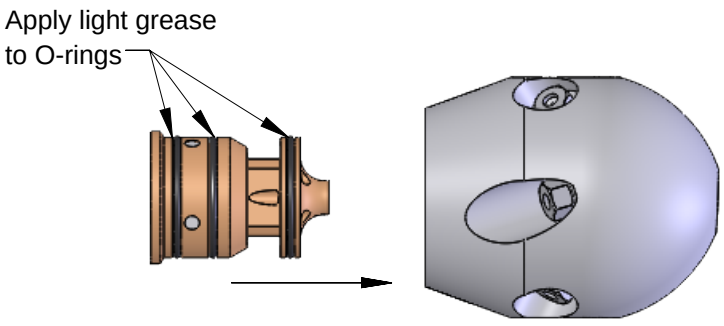

Step 2: Reinstall cartridge assembly back into the head. Use arbor press if needed to push the cartridge into the head (WHR 060-RXX).

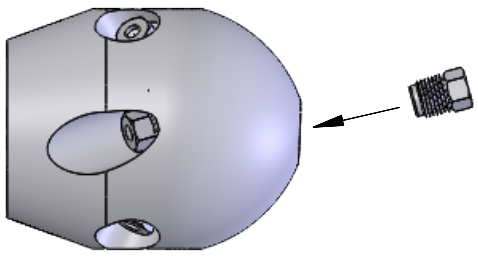

Step 3: Reinstall the front nozzle or plug into the head with appropriate teflon tape and Anti-Seize.

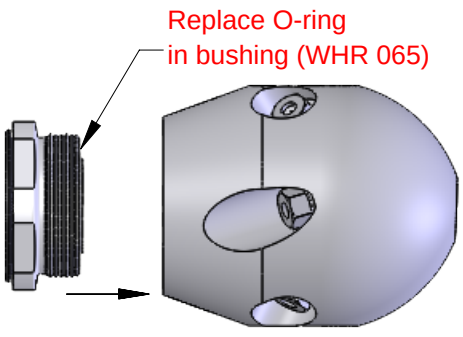

Step 4: Reinstall bushing (WHR 061-.875-1.50) into the head. Apply light grease the the o-ring to hold in place. Tighten bushing until their is a solid bottom out. Head is ready to be reinstalled on the WHR tool.

É 12/05/2017 StoneAge®, All Rights Reserved