SG Swivel (SG-P8P8, SG-P12P12-62, SG-P12K-62, SG-MP12AV12, SG-MP12K-62, SG-MP16MP16-62, SG-MP16K-62)

Description and Operation:

The **SG** swivel was designed to convey high pressure fluid from a stationary line to a rotating or twisting assembly. Rotating manifold and nozzle assemblies can be mounted on the output shaft. This swivel is also used on hose reels and connecting high pressure hose to a maneuverable jet. Due to the unique seal design, the torque necessary to turn the swivel is relatively small, even at high pressures. At 10,000 psi only 2 ft-lb. is required for rotation.

Several styles of the **SG** swivel are available. Porting size and type vary as well as pressure and flow ratings. Models with pipe (P8,P12) threads are rated to 15,000 psi; autoclave cone and thread models are rated to 22,000 psi.

A single high pressure seal is used to provide near leak free operation. It is long lived, but is considered a wearable item. At 10,000 psi and a constant 50 rpm it should last a minimum of 150 hours. The swivel may leak after periods of non-use due to seal sticking. Rotate the shaft while pressurizing the system. This should free the sticking seal.

Small leaks may occur intermittently through the weep holes in the inlet nut, particularly at low pressures. Only if continuous leaks at operating pressure occur should seal replacement be necessary.

Model	P8P8	P12P12-62	MP12AV12	MP16MP16
Operating Pressure Range	2,000 - 15,000 psi	2,000 - 15,000 psi	2,000 - 22,000 psi	2,000 - 22,000 psi
Inlet Connection	1/2 npt	3/4 npt	3/4 MP	1 MP
Rotation Speed, Max	600 rpm	600 rpm	600 rpm	600 rpm
Max Flow	60 gpm	100 gpm	50 gpm	100 gpm

Use Parker Thread Mate and Teflon tape on all pipe thread connections (P8, P12); use anti-seize on all straight thread connections (K, MP12, MP16) to the swivel inlet and outlet. Grease the swivel every 80 hours of use, depending on rotation rate and service conditions. Both zerks need to be greased (they grease different areas of the swivel). StoneAgeÈ recommends Mobilith SHCÈ PM 460 (ISO VG 460; NLGI Grade 1.5). Also available from StoneAgeÈ as part number GP 048.

The swivel body or inlet nut cannot be used to push on the shaft unless the tool is pressurized. The shaft is a press fit into the bearings, and pushing on the shaft while holding the body will just push the shaft back through the bearings until it runs up against the inlet nut, causing damage. Once pressurized, the high pressure seal tries to push the shaft away from the inlet nut with several thousand pounds of force.

Troubleshooting:

Swivel will not rotate: Bearings need to be replaced. If there is water in them and they are corroded, replace the shaft seals.

Seal Leak: The seal may leak initially up to several thousand psi, but should pop closed as pressure is increased. If operating pressure is reached and the seal is leaking continuously, the high pressure seal may need to be replaced. Refer to the maintenance below. Inspect the face of the inlet nut for pitting or grooves from erosion; if present, the swivel will leak until the inlet nut is refaced or replaced.

Seals wear out quickly: The tool must be disassembled and inspected. The carbide seat should be checked for being installed in the right direction, and it should not have any chips or erosion marks on it. The bore of the shaft where the high pressure seal is located should be checked for grooving. If it is worn larger than .510" or larger than .635", the shaft will need to be replaced.

Maintenance: *Blow out all water with compressed air before storing tool!

Seal Detail

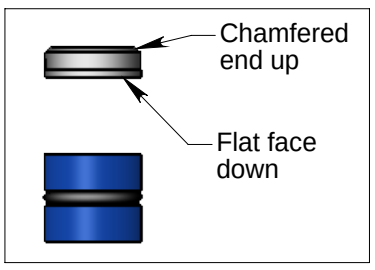

High Pressure Seal Maintenance:

1) Hold the swivel vertically in vise on flats.

2) Remove the inlet nut (002).

3) Lift out Carbide seat (011), H.P. Seal w/ O-RIng (012), and Coil Spring (when used) (BJ 013-L). Seals may be difficult to remove. Be careful when removing these parts.

4) Inspect Carbide Seat and seals for wear. Replace if edges are chipped. If the seal is more than 50% consumed, replace it.

5) Check shaft bore I.D.. Replace if larger than .510" or .635" for '62' style.

6) Slide the seal (with O-Ring and Spring 'BJ Model') and seat back into the bore of the shaft. NOTE the orientation of the seat. The large flatside goes against the blue seal. The chamfered end goes toward the inlet nut.

7) Apply anti-sieze to the threads of the nut and thread into the body.

8) Grease BOTH zerks on the swivel after assembling. Check to see that the shaft rotates freely.

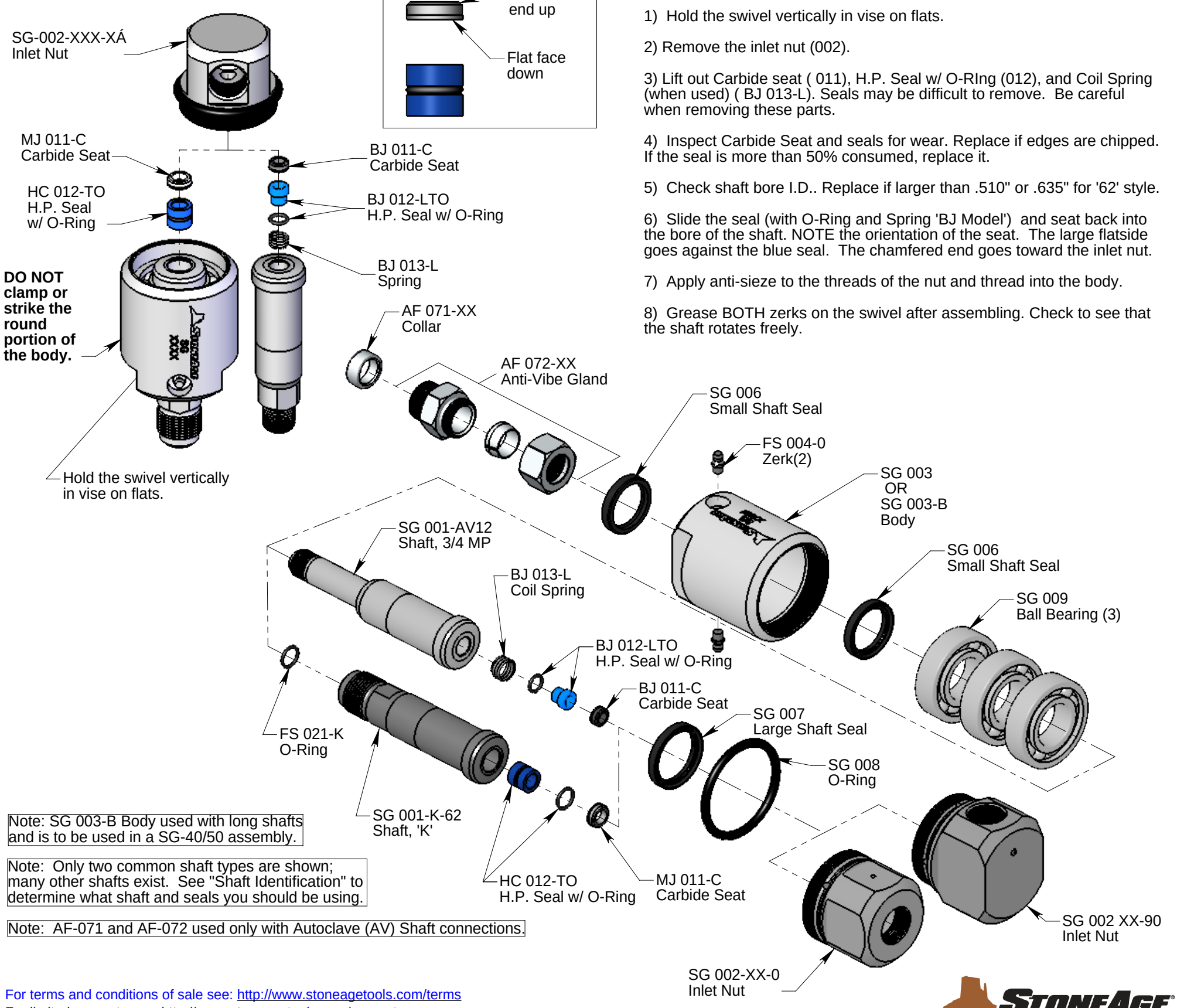

Note: SG 003-B Body used with long shafts and is to be used in a SG-40/50 assembly.

Note: Only two common shaft types are shown; many other shafts exist. See "Shaft Identification" to determine what shaft and seals you should be using.

Note: AF-071 and AF-072 used only with Autoclave (AV) Shaft connections.

For terms and conditions of sale see: http://www.stoneagetools.com/terms
For limited warranty see: http://www.stoneagetools.com/warranty
For applicable patents see: http://www.sapatents.com

SG Swivel (SG-P8P8, SG-P12P12-62, SG-P12K-62, SG-MP12AV12, SG-MP12K-62, SG-MP16MP16-62, SG-MP16K-62)

Assembly:

1. Install Large Shaft Seal (SG 007) in the Inlet Nut (SG 002) with the spring side facing into the Inlet Nut as shown. Apply grease to the lips of the seal.

2. Small Shaft Seals (SG 006) are pressed into body (one inside and one outside). Note the orientation of the seal lips, facing away from one another.

3. Grease new bearings (SG 009) and press them onto Shaft (SG 001) one at a time.

4. Push Shaft with bearings into Body (SG 003).

5. Apply grease to the H.P. Seal and install in bore of shaft.

6. Install Seat with flat face against H.P. Seal (See other side of sheet for detail.)

7. Apply anti-seize to threads of Inlet Nut; thread into Body, making sure Seat stays in bore of Shaft. Tighten to 40 ft-lb.

8. Install O-Ring (SG 008).

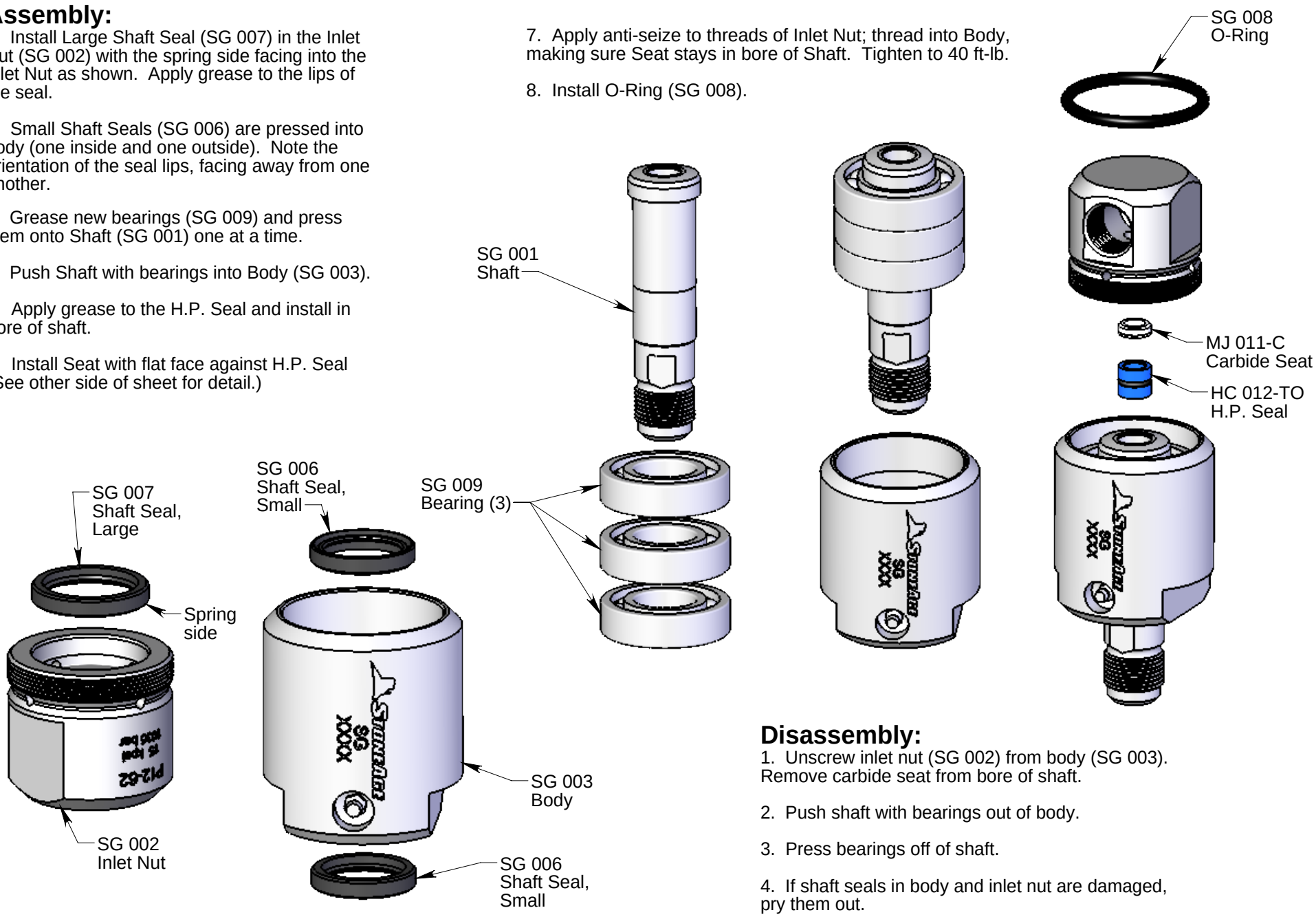

Disassembly:

1. Unscrew inlet nut (SG 002) from body (SG 003). Remove carbide seat from bore of shaft.

2. Push shaft with bearings out of body.

3. Press bearings off of shaft.

4. If shaft seals in body and inlet nut are damaged, pry them out.

Shaft and Seal Identification: (real size)

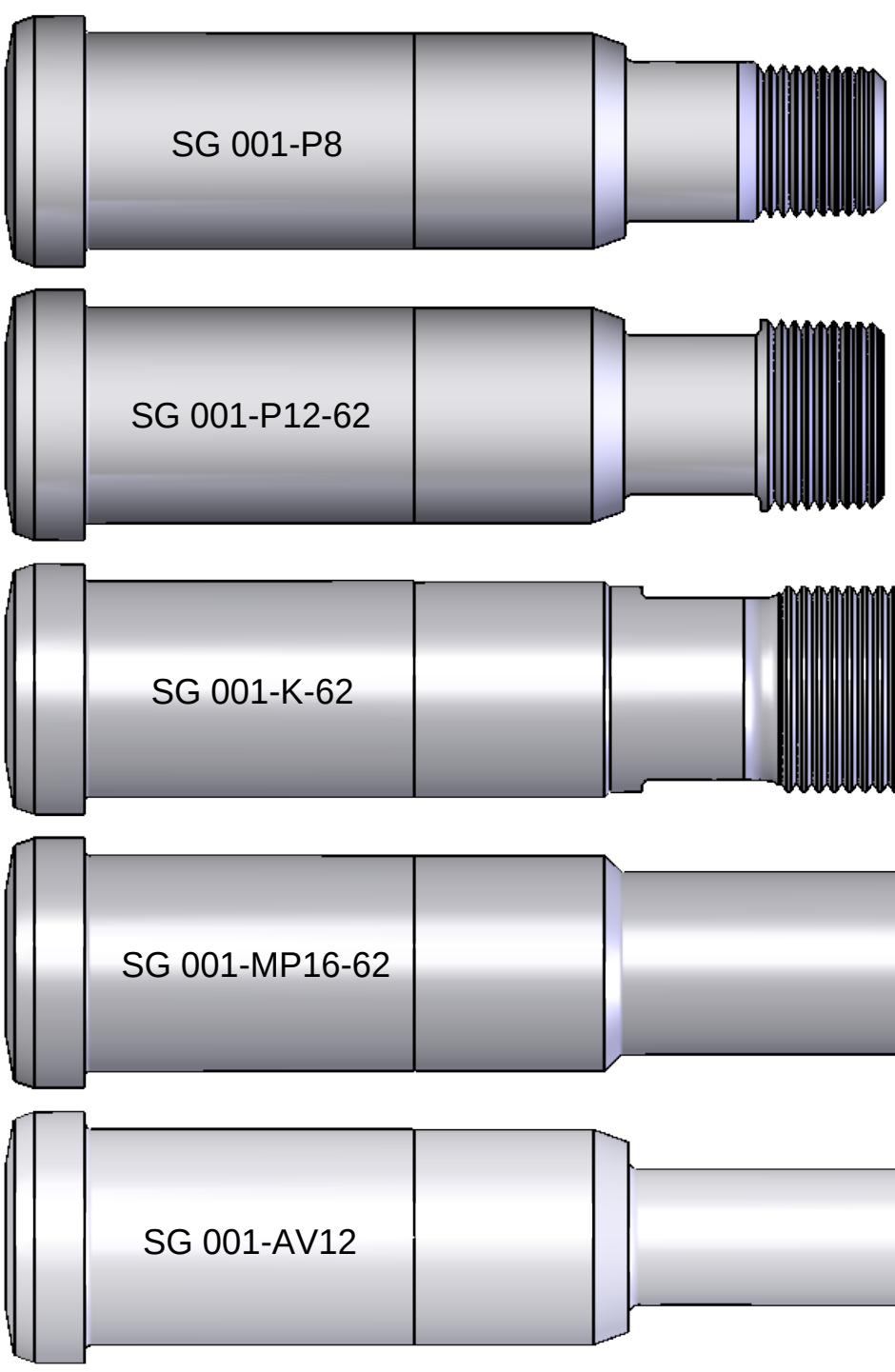

The first thing to be determined is the high pressure seal type and size. There are two basic types; the type covered in this sheet consists of a round carbide seat and a blue plastic seal; there are two sizes of this seal design. The sizes consist of 1/2"∅ and 5/8"∅. The 1/2" Ï seal system includes a coil spring. The two circles below can be used for comparison purposes to determine the seal/seat diameter.

The other seal type consists of two identical carbide face seals; these are easily identified by their "ears" that fit into grooves in the inlet nut and shaft. This type of seal is called the CCN; these swivels have their own sheet.

The second feature to be determined is the type of connection/seal at the male end of the shaft. There are three different types; K-Type, Autoclave, and Pipe. The most noticable of the three connections is the K-Type due to the fact that an O-Ring is used on the male end. Autoclave ends have a coned surface that creates a seal. Pipe Threads have tapered threads to create a sealed connection. The shafts to the left are drawn full scale to use in identification.

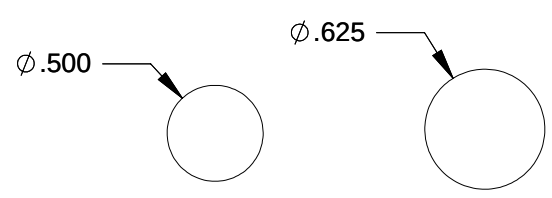

PL 518 É 07/12/2018 StoneAgeÊ, All Rights Reserved