SG-CCN Swivel (SG-CCN-P12K, SG-CCN-MP12K, SG-CRS-MP12K)

Description:

The **SG-CCN** swivel was designed as a rotating swivel connection for high rotation speeds. Rotating manifold and nozzle assemblies can be mounted on the output shaft. This seal design is capable of rotation speeds up to 2000 rpm. Due to unique seal design, the torque necessary to turn the swivel is relatively small, even at high pressures.

Models	CCN-P12K	CCN-MP12K
Operating Pressure Range	2,000 - 15,000 psi	2,000 - 22,000 psi
Inlet Connection	3/4 npt	3/4 MP
Rotation Speed, Max	2,000 rpm	2,000 rpm
Flow Rating	2.3 Cv	2.3 Cv

Several styles of the **SG-CCN** swivel are available. Porting size and type vary as well as pressure and flow ratings.

A carbide face seal is used to provide near leak free operation. Small leaks will occur through the weep holes in the inlet nut. This is normal for this type of seal design. Replace seal when pressure drop due to seal leak becomes unacceptable.

Use Parker Thread Mate and Teflon tape on all pipe thread connections (P8, P12); use anti-seize on all straight thread connections (K, MP12, MP16) to the swivel inlet and outlet. Grease the swivel every 80 hours of use, depending on rotation rate and service conditions. Both zerks need to be greased (they grease different areas of the swivel). StoneAgeÈ recommends Mobilith SHCÊ PM 460 (ISO VG 460; NLGI Grade 1.5). Also available from StoneAgeÈ as part number GP 048.

The swivel body or inlet nut cannot be used to push on the shaft unless the tool is pressurized. The shaft is a press fit into the bearings, and pushing on the shaft while holding the body will just push the shaft back through the bearings until it runs up against the inlet nut, causing damage. Once pressurized, the high pressure seal tries to push the shaft away from the inlet nut with several thousand pounds of force.

Troubleshooting:

Swivel will not rotate: Bearings need to be replaced. If there is water in them and they are corroded, replace the shaft seals.

Seal Leak: This type of seal design uses a slight amount of water leakage for lubrication; it should not be more than a few drips with a new set of seals, but will gradually increase over time as the seals wear. Replace the seals when the amount of leakage is causing too much problem with spray or not being able to maintain pressure. Always replace the O-ring and Backup ring (RJ 040-K, RJ 031) when the seals are replaced.

Dump Cartridge Leak: (Applies only to the SG-CRS) Replace the cartridge assembly (FC 301) when pressure can no longer be maintained.

Carbide Seal Break: If a carbide seal shatters, clean all grease from bearings to remove all possible pieces of carbide. Check that the ears of a new seal will fit in between the slot on the nut and shaft without forcing it. If necessary, clean up and remove burrs from slot with a file or small rotary grinder.

High Pressure Seal Maintenance:

***Blow out all water with compressed air before storing tool!**

1) Hold the swivel vertically in vise on flats.

2) Remove the inlet nut (002).

3) Remove the Seal (054),Wave Spring (051), Backup Ring (031), and O-Ring (040-K from both the nut and the shaft. The seals may be held tightly in place by the O-Rings; use two small screwdrivers under the ears to pry them out.

4) Inspect Carbide seals for type of wear. Both seals need to be replaced with new ones. Don't put them in yet.

5) Replace the seal O-Rings (040-K) and backup rings (031) in the nut and shaft. Note that the O-ring goes in first, followed by the Backup ring.

6) Apply grease to the small cylindrical end of the face seal; center the wave spring over the bore of the shaft or nut and carefully push in the face seal. Make sure the spring pushes the seal back up.

7) Apply anti-sieze to the threads of the nut and thread into the body.

8) Grease BOTH zerks on the swivel after assembling. Check to see that the shaft rotates freely.

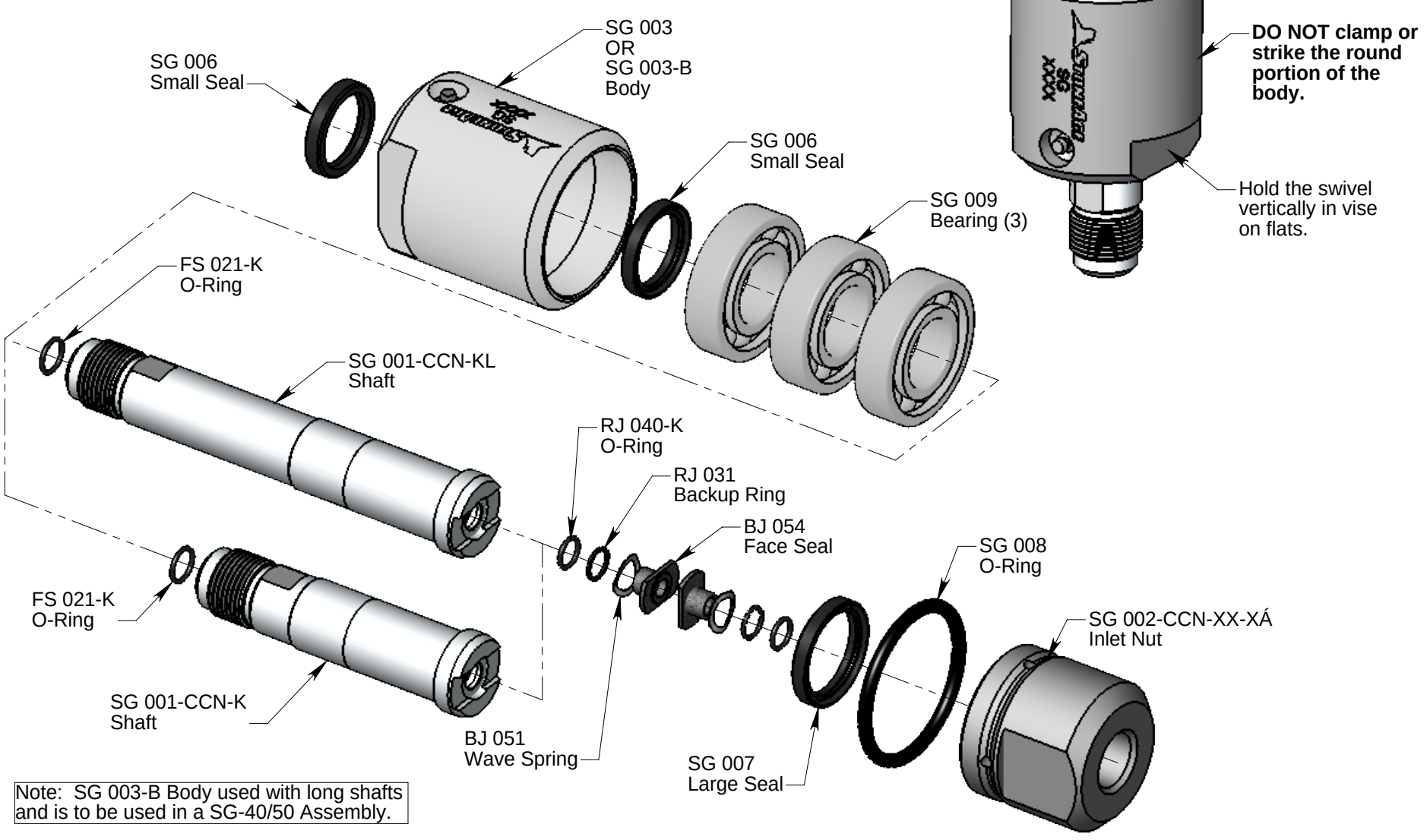

Note: SG 003-B Body used with long shafts and is to be used in a SG-40/50 Assembly.

For terms and conditions of sale see: http://www.stoneagetools.com/terms
For limited warranty see: http://www.stoneagetools.com/warranty
For applicable patents see: http://www.sapatents.com

SG-CCN Swivel (SG-CCN-P12K, SG-CCN-MP12K, SG-CRS-MP12K)

Assembly:

1. Install Large Shaft Seal (SG 007) in the Inlet Nut (SG 002) with the spring side facing into the Inlet Nut as shown. Apply grease to the lips of the seal.

2. Small Shaft Seals (SG 006) are pressed into body (one inside and one outside). Note the orientation of the seal lips, facing away from one another.

3. Grease new bearings (SG 009) and press them onto Shaft (SG 001) one at a time.

4. Push Shaft with bearings into Body (SG 003).

5) Install O-Rings (040-K) and backup rings (031) in the nut and shaft. Note that the O-ring goes in first, followed by the Backup ring.

6) Apply grease to the small cylindrical end of the face seal; center the wave spring over the bore of the shaft or nut and carefully push in the face seal. Make sure the spring pushes the seal back up.

7) Apply anti-sieze to the threads of the nut and thread into the body.

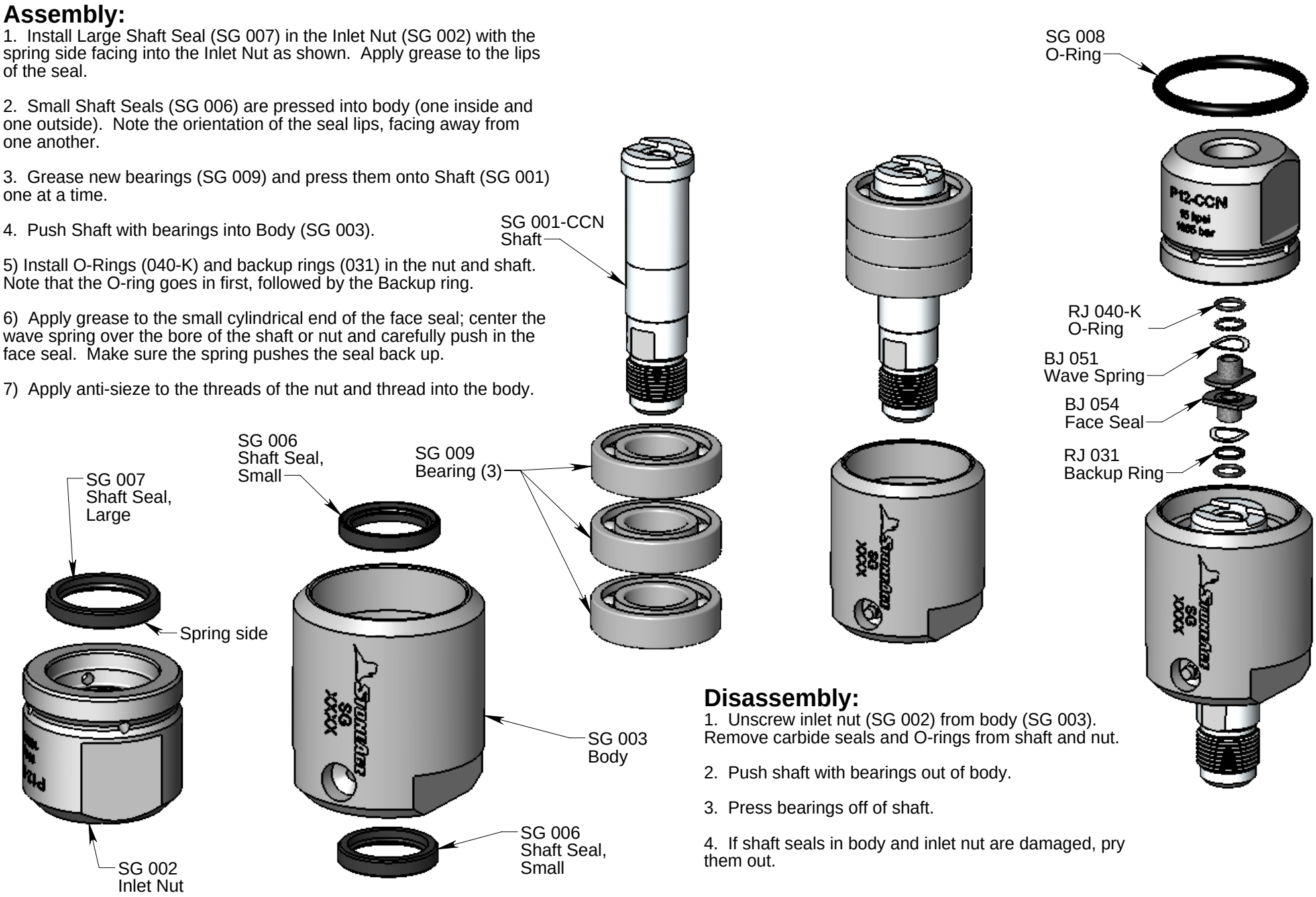

Disassembly:

1. Unscrew inlet nut (SG 002) from body (SG 003). Remove carbide seals and O-rings from shaft and nut.

2. Push shaft with bearings out of body.

3. Press bearings off of shaft.

4. If shaft seals in body and inlet nut are damaged, pry them out.

SG-CRS-MP12K EXPLODED ASSEMBLY

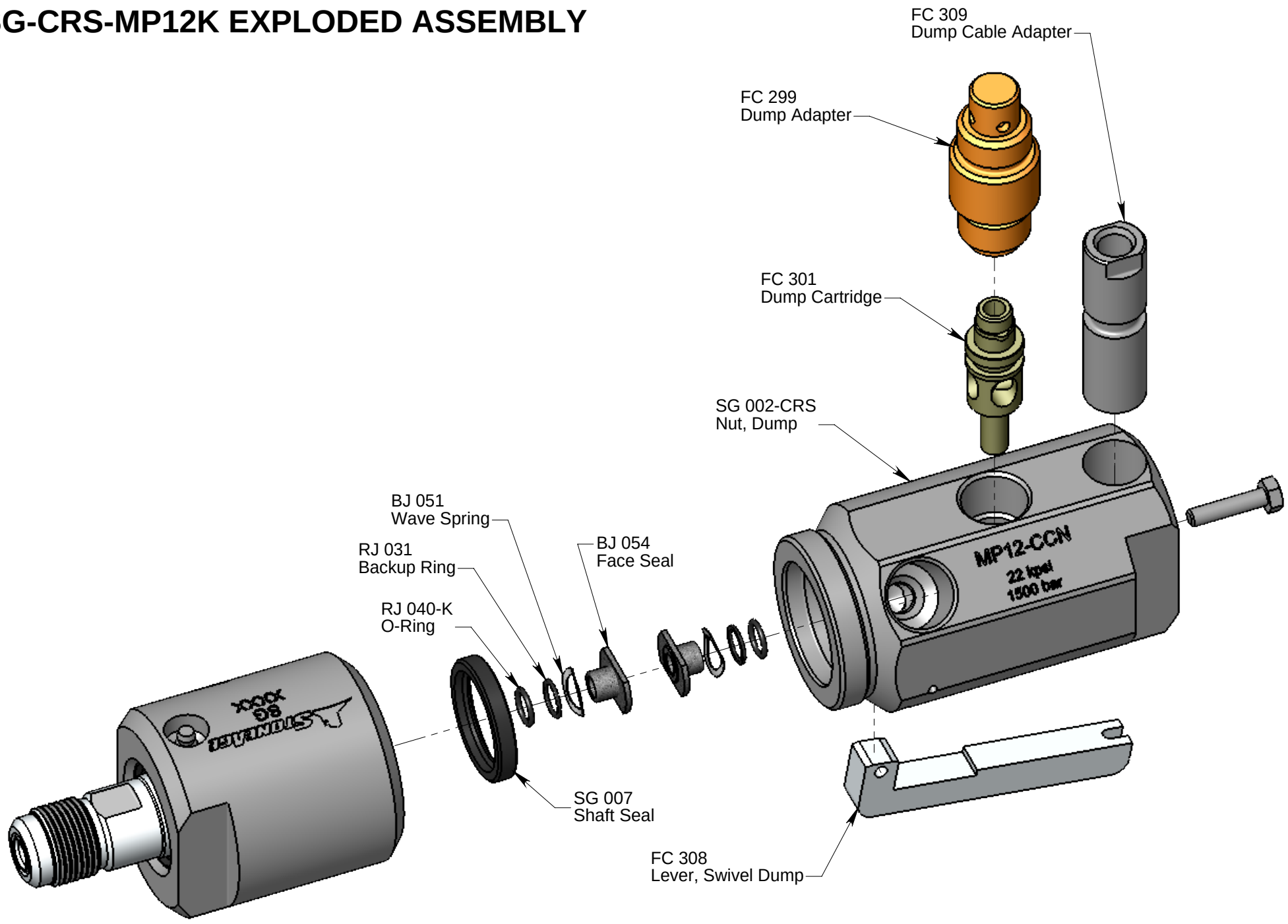

PL 535 É 07/12/2018 StoneAge®, All Rights Reserved